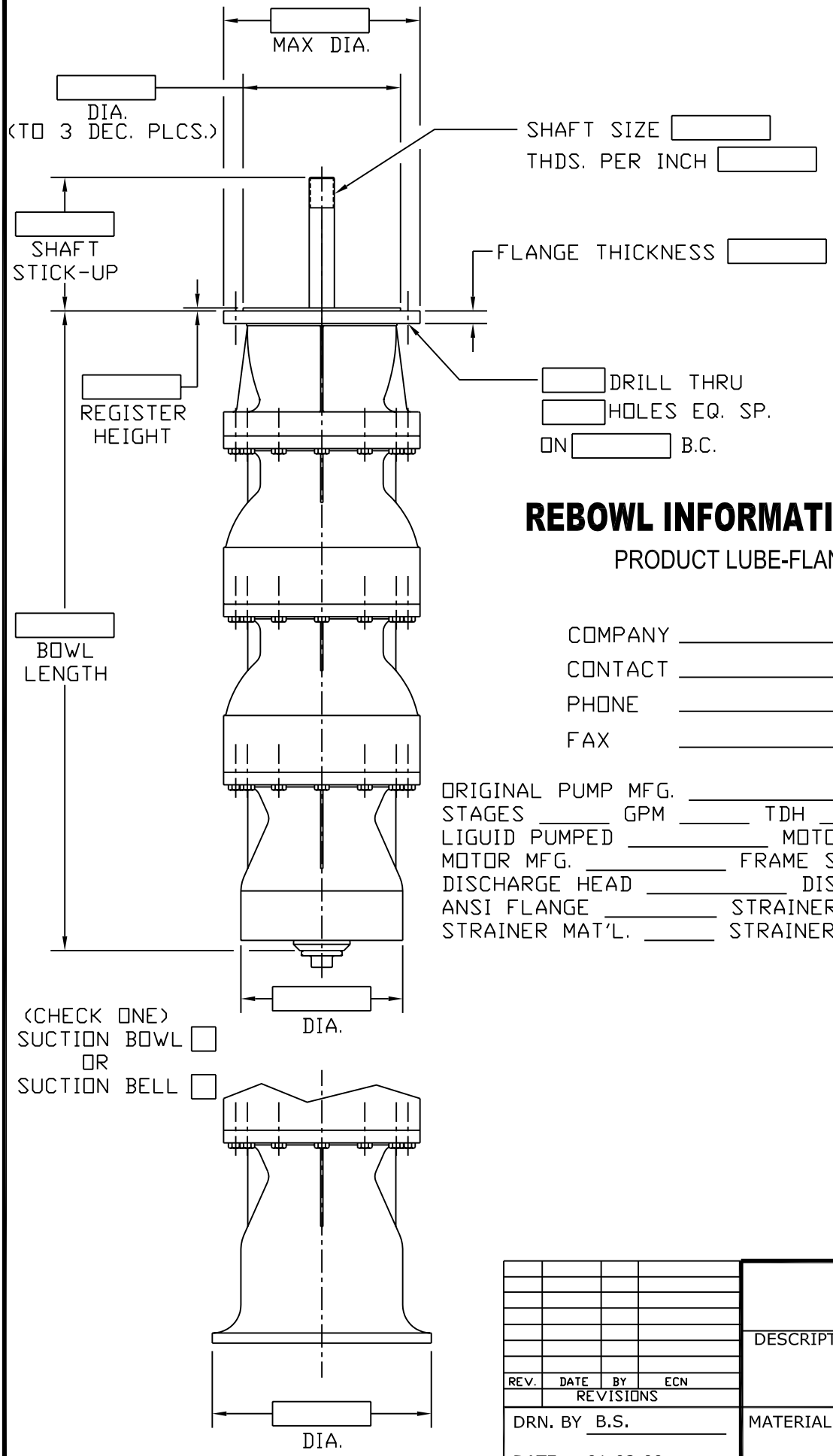

REBOWL INFORMATION SHEET

PRODUCT LUBE-FLANGED

COMPANY _____

CONTACT _____

PHONE _____

FAX _____

ORIGINAL PUMP MFG. _____ PUMP MODEL _____

STAGES _____ GPM _____ TDH _____ RPM _____

LIQUID PUMPED _____ MOTOR HORSEPOWER _____

MOTOR MFG. _____ FRAME SIZE _____ VHS OR VSS

DISCHARGE HEAD _____ DISCHARGE CENTERLINE _____

ANSI FLANGE _____ STRAINER TYPE _____

STRAINER MAT'L. _____ STRAINER DEPTH & O.D. _____ X _____

REV.	DATE	BY	ECN

REVISIONS

DRN. BY B.S.

DATE 01-03-00

Hydroflo pumps

DESCRIPTION:

REBOWL INFORMATION SHEET
PRODUCT LUBE-FLANGED

MATERIAL

DRWG NO A-00065

REV

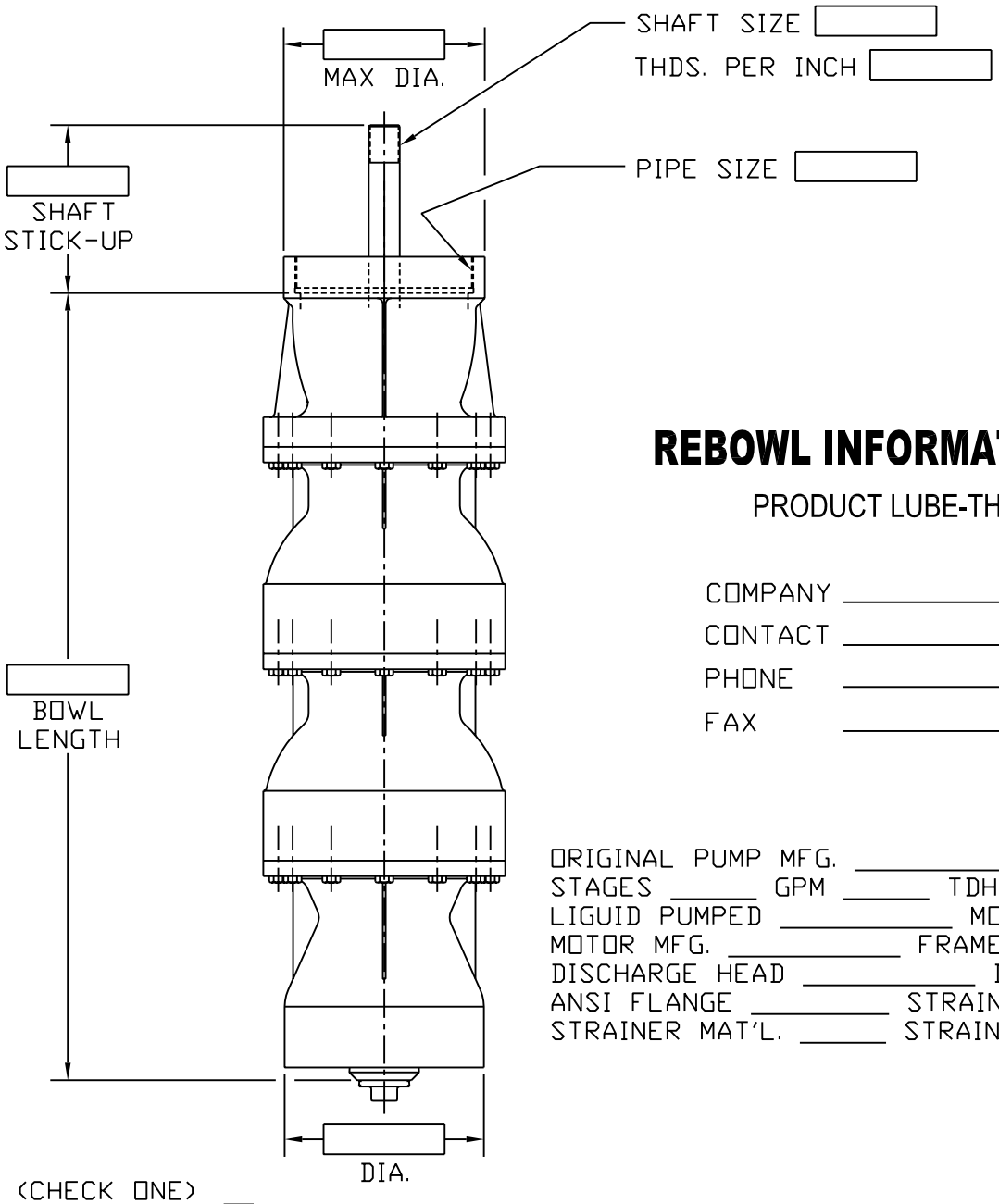

REBOWL INFORMATION SHEET

PRODUCT LUBE-THREADED

COMPANY _____

CONTACT _____

PHONE _____

FAX _____

ORIGINAL PUMP MFG. _____ PUMP MODEL _____
STAGES _____ GPM _____ TDH _____ RPM _____
LIGUID PUMPED _____ MOTOR HORSEPOWER _____
MOTOR MFG. _____ FRAME SIZE _____ VHS OR VSS
DISCHARGE HEAD _____ DISCHARGE CENTERLINE _____
ANSI FLANGE _____ STRAINER TYPE _____
STRAINER MAT'L. _____ STRAINER DEPTH & O.D. _____ X _____

(CHECK ONE)
SUCTION BOWL ☐
OR
SUCTION BELL ☐

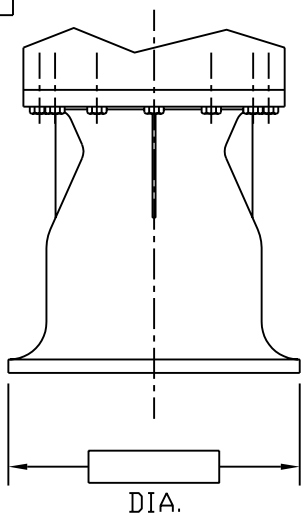

REV.	DATE	BY	ECN

REVISIONS

DRN. BY B.S.

DATE 01-03-00

Hydroflo pumps

DESCRIPTION:

REBOWL INFORMATION SHEET
PRODUCT LUBE-THREADED

MATERIAL

DRWG NO A-00064

REV △

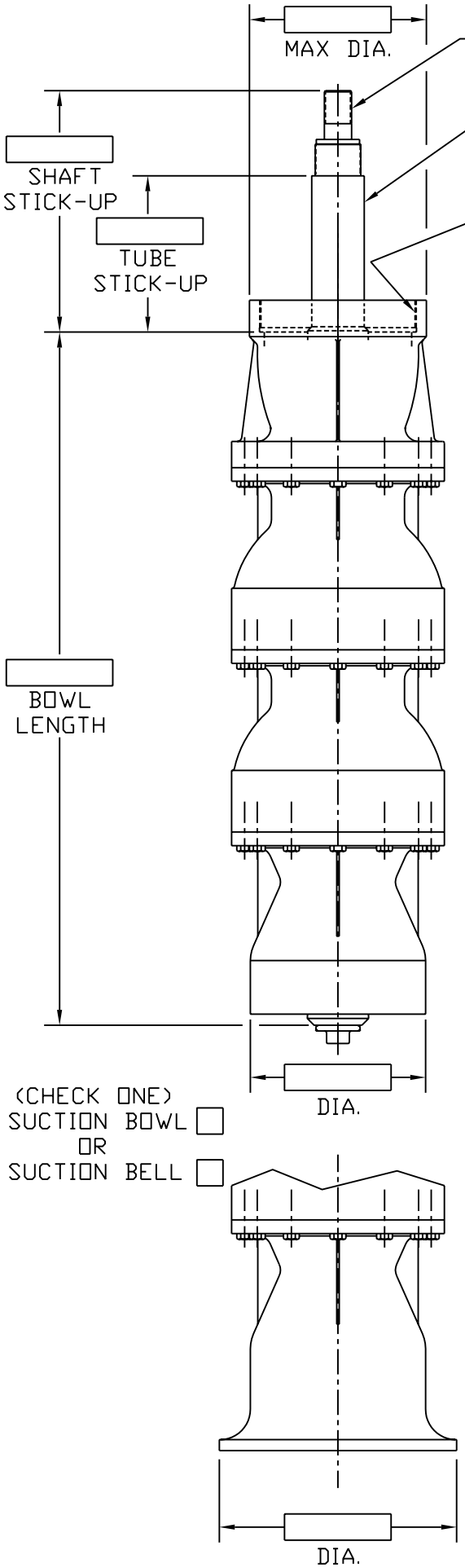

SHAFT SIZE ☐ THDS. PER INCH ☐

TUBE SIZE ☐ THDS. PER INCH ☐

L.H. THREAD ☐ OR R.H. THREAD ☐
(CHECK ONE)

PIPE SIZE ☐

REBOWL INFORMATION SHEET

OIL LUBE-THREADED

COMPANY _____

CONTACT _____

PHONE _____

FAX _____

ORIGINAL PUMP MFG. _____ PUMP MODEL _____
STAGES _____ GPM _____ TDH _____ RPM _____
LIGUID PUMPED _____ MOTOR HORSEPOWER _____
MOTOR MFG. _____ FRAME SIZE _____ VHS OR VSS
DISCHARGE HEAD _____ DISCHARGE CENTERLINE _____
ANSI FLANGE _____ STRAINER TYPE _____
STRAINER MAT'L. _____ STRAINER DEPTH & O.D. _____ X _____

(CHECK ONE)
SUCTION BOWL ☐
OR
SUCTION BELL ☐

REV.	DATE	BY	ECN

REVISIONS

DRN. BY B.S.

DATE 01-03-00

Hydroflo pumps

DESCRIPTION:
REBOWL INFORMATION SHEET
OIL LUBE-THREADED

MATERIAL

DRWG NO A-00062

REV △

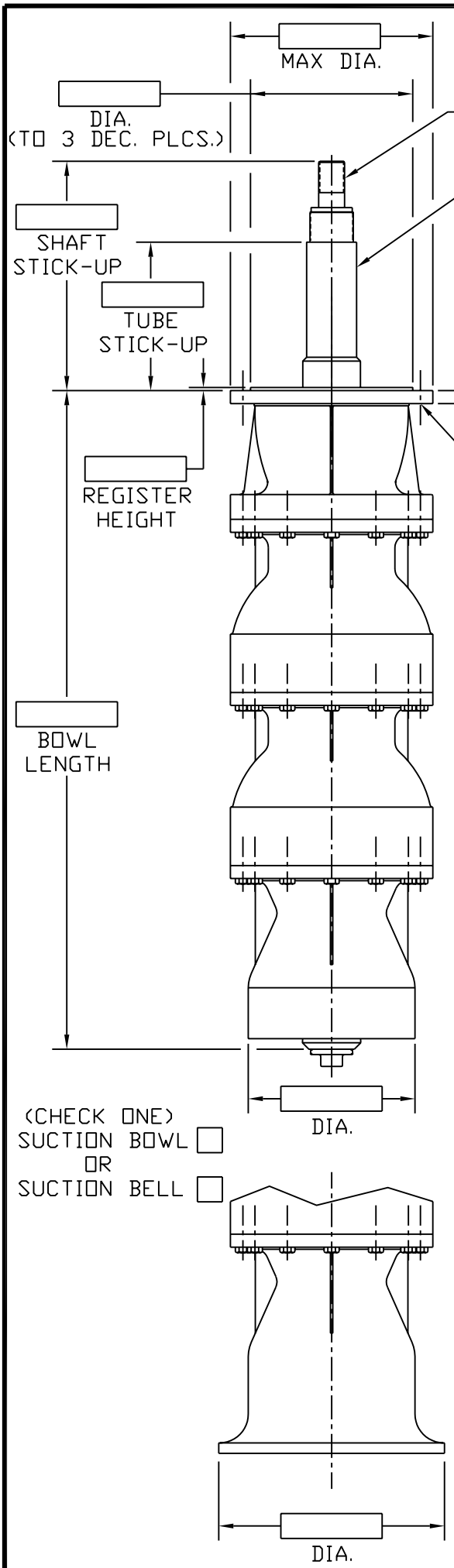

SHAFT SIZE ☐ THDS. PER INCH ☐

TUBE SIZE ☐ THDS. PER INCH ☐

L.H. THREAD ☐ OR R.H. THREAD ☐
(CHECK ONE)

FLANGE THICKNESS ☐

☐ DRILL THRU
☐ HOLES EQ. SP.
ON ☐ B.C.

REBOWL INFORMATION SHEET

OIL LUBE-FLANGED

COMPANY _____

CONTACT _____

PHONE _____

FAX _____

ORIGINAL PUMP MFG. _____ PUMP MODEL _____
STAGES _____ GPM _____ TDH _____ RPM _____
LIQUID PUMPED _____ MOTOR HORSEPOWER _____
MOTOR MFG. _____ FRAME SIZE _____ VHS OR VSS
DISCHARGE HEAD _____ DISCHARGE CENTERLINE _____
ANSI FLANGE _____ STRAINER TYPE _____
STRAINER MAT'L. _____ STRAINER DEPTH & O.D. _____ X _____

REV.	DATE	BY	ECN

REVISIONS

DRN. BY B.S.

DATE 01-03-00

Hydroflo pumps

DESCRIPTION:

REBOWL INFORMATION SHEET
OIL LUBE-FLANGED

MATERIAL

DRWG NO A-00063

REV